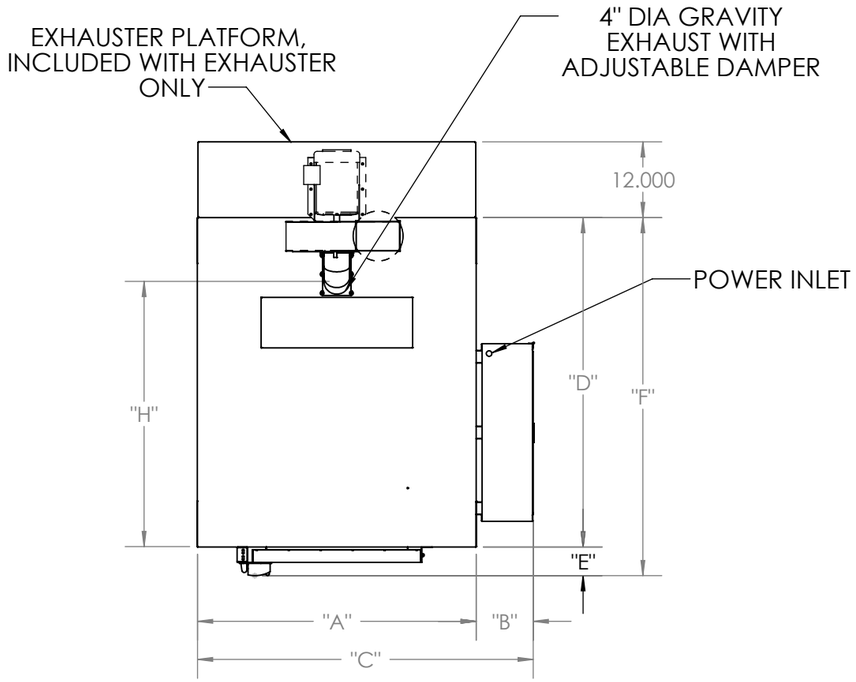

OVEN DIMENSIONS

MODEL	WORK SPACE W x D x H	KW	VOLUME CU. FT.	CFM	MOTOR H. P.	INSULATION THICKNESS	"A"	"B"	"C"	"D"	"E"	"F"	"G"	"H"	"J"
AA-550	24" x 24" x 24"	5	8	400	1/3	6"	40"	9"	49"	48"	4"	52"	36"	40"	20"
AA-700	24" x 24" x 24"	7	8	400	1/3	8"	44"	9"	53"	52"	4"	56"	40"	42"	22"
AA-850	24" x 24" x 24"	9	8	400	1/3	8"	44"	9"	53"	52"	4"	56"	40"	42"	22"

OPTIONAL POWERED FORCED EXHAUSTER DIMENSIONS

MODEL	80 CFM				130 CFM				325 CFM			
	"K"	"L"	"M"	"N"	"K"	"L"	"M"	"N"	"K"	"L"	"M"	"N"
AA-550	22 7/16"	46 3/16"	17 1/8"	4"	24 1/8"	47"	20 1/2"	4"	26 1/2"	47 1/8"	23"	6"
AA-700-850					26 1/8"	49"	20 1/2"	4"	28 1/2"	49 1/8"	23"	6"

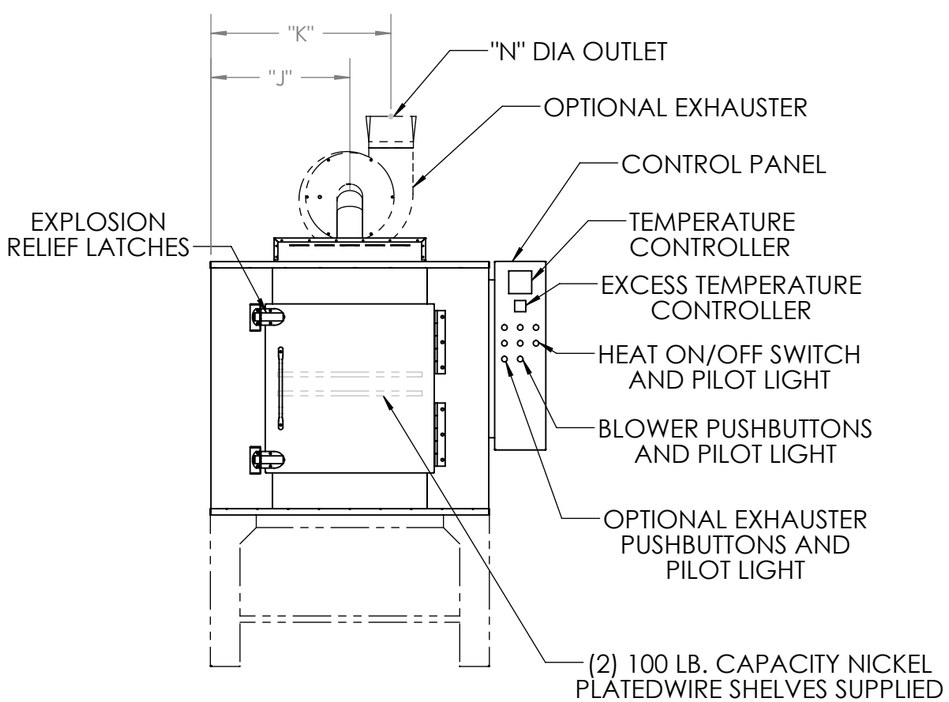

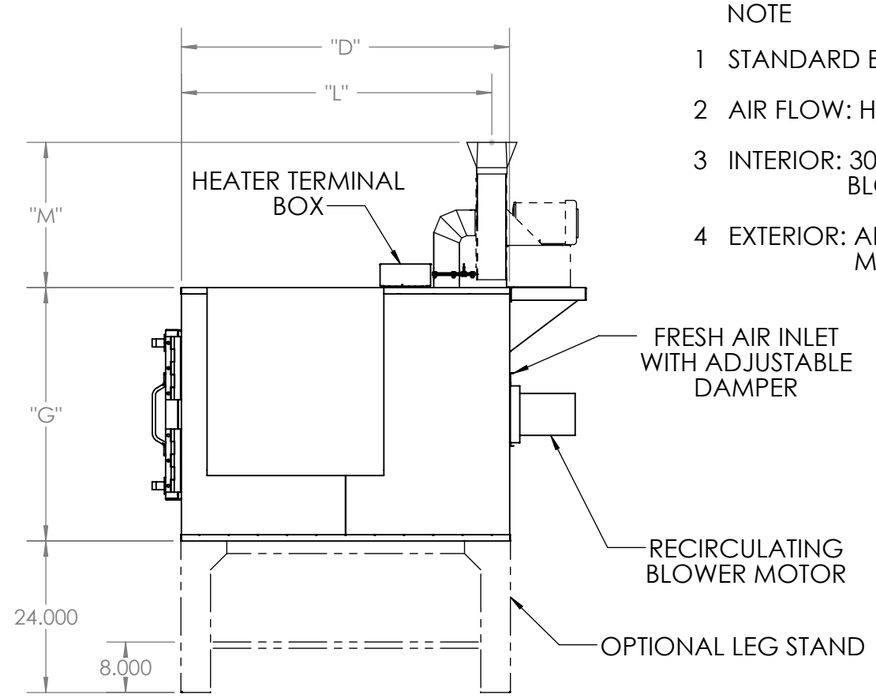

NOTE

1. STANDARD ELECTRICAL SERVICE: 230/3/60, 460/3/60
2. AIR FLOW: HORIZONTAL, FRONT TO BACK
3. INTERIOR: 304 STAINLESS STEEL, WITH CARBON STEEL BLOWER WHEEL
4. EXTERIOR: ALUMINIZED STEEL, PAINTED TRILITE GREEN MACHINERY ENAMEL

This drawing is the property of THE GRIEVE CORPORATION, and may not be used or reproduced without the express permission of THE GRIEVE CORPORATION

REV.	DESCRIPTION	BY	DATE

DESCRIPTION

CUSTOMER

MODEL: AA-550, AA-700, AA-850, HORIZONTAL UNIVERSAL OVENS

SHOP ORDER

DRAWN BY: JC

DATE

PRINT DATE: 3/9/2011

DWG. NO.: AA-550 AA-850

THE GRIEVE CORPORATION 500 HART ROAD, ROUND LAKE, ILLINOIS, USA 60073-2898 TEL. +1847.546.8225 FAX +1.847.546.9210

THE GRIEVE CORPORATION 500 HART ROAD, ROUND LAKE, ILLINOIS, USA 60073-2898 TEL. +1847.546.8225 FAX +1.847.546.9210