Installation & Maintenance Instructions

ASCO Red-Hat II ®

OPEN−FRAME, GENERAL PURPOSE, WATERTIGHT/EXPLOSIONPROOF SOLENOIDS

SERIES
8017G
8014G
I&M No.V7221R3

NOTICE: See separate valve installation and maintenance instructions for information on: Operation, Positioning, Mounting, Cleaning, Preventive Maintenance, Causes of Improper Operation, Disassembly and Reassembly of basic valve.

DESCRIPTION

Series 8017G and 8014G are epoxy encapsulated solenoids. The green solenoid with lead wires and 1/2″ conduit connection is designed to meet Enclosure Type 1−General Purpose, Type 2−Dripproof, Types 3 and 3S−Raintight, and Types 4 and 4X−Watertight. The black solenoid on catalog numbers prefixed "EF" is designed to meet Enclosure Types 3 and 3S−Raintight, Types 4 and 4X−Watertight, Types 6 and 6P−Submersible, Type 7 (A, B, C & D) Explosionproof Class I, Division 1 Groups A, B, C, & D and Type 9 (E & F)−Dust−Ignitionproof Class II, Division 1 Groups E & F. See ***Temperature Limitations*** section for solenoid identification and nameplate/retainer for service. When Series 8017G is installed just as a solenoid and not attached to an ASCO valve, the core has a 0.250−28 UNF−2B tapped hole, 0.38 minimum full thread.

Catalog Nos. 8017G1 and 8017G2 are pull type direct−acting solenoids, while Catalog Nos. 8014G1 and 8014G2 are push type reverse−acting solenoids.

General purpose solenoids (green) are available in open−frame construction. This construction may be supplied with 1/4″ spade, screw or DIN terminals (Refer to Figure 2).

Optional Features For Type 1 − General Purpose Construction Only

- **Junction Box:** This junction box construction meets Enclosure Types 2,3,3S,4, and 4X. Only solenoids with 1/4″ spade or screw terminals may have a junction box. The junction box provides a 1/2″ conduit connection, grounding and spade or screw terminal connections within the junction box (See Figure 3).
- **DIN Plug Connector Kit No. K236034:** Use this kit only for solenoids with DIN terminals. The DIN plug connector kit provides a two pole with grounding contact DIN Type 43650 construction (See Figure 4).

OPERATION

Series 8017G − When the solenoid is energized, the core is drawn into the solenoid base sub−assembly. **IMPORTANT: When the solenoid is de−energized, the initial return force for the core, whether developed by spring, pressure, or weight, must exert a minimum force to overcome residual magnetism created by the solenoid. Minimum return force is 1 pound, 12 ounces.**

Series 8014G − When the solenoid is energized, the disc holder assembly seats against the orifice. **IMPORTANT: Initial return force for the disc or disc holder assembly, whether developed by spring, pressure, or weight, must exert a minimum force to overcome residual magnetism created by the solenoid. Minimum return force is 1 pound, 12 ounces. When the solenoid is de−energized , the disc holder assembly returns.**

INSTALLATION

Check nameplate for correct catalog number, service, and wattage. Check front of solenoid for voltage and frequency.

⚠ WARNING: Electrical hazard from the accessibility of live parts. To prevent the possibility of death, serious injury or property damage, install the open−frame solenoid in an enclosure.

FOR BLACK ENCLOSURE TYPES 7 AND 9 ONLY

⚠ CAUTION: To prevent fire or explosion, do not install solenoid and/or valve where ignition temperature of hazardous atmosphere is less than 180° C.

NOTE: These solenoids have an internal non−resetable thermal fuse to limit solenoid temperature in the event that extraordinary conditions occur which could cause excessive temperatures. These conditions include high input voltage, a jammed core, excessive ambient temperature or a shorted solenoid, etc. This unique feature is a standard feature only in solenoids with black explosionproof/dust−ignitionproof enclosures (Types 7 & 9).

⚠ CAUTION: To protect the solenoid valve or operator, install a strainer or filter, suitable for the service involved in the inlet side as close to the valve or operator as possible. Clean periodically depending on service conditions. See ASCO Series 8600, 8601, and 8602 for strainers.

Temperature Limitations

For maximum valve ambient temperatures, refer to chart. The temperature limitations listed, only indicate maximum application temperatures for field wiring rated at 90°C. Check catalog number prefix and watt rating on nameplate to determine maximum ambient temperature. See valve installation and maintenance instructions for maximum fluid temperature. NOTE: For steam service, refer to ***Wiring*** section, ***Junction Box*** for temperature rating of supply wires.

Temperature Limitations For Series 8017G or 8014G Solenoids for use on Valves Rated at 16.1 or 20.1 Watts

Watt Rating	Catalog Number Coil Prefix	Class of Insulation	Maximum † Ambient Temp.
16.1	None, KF, KP SD, SF, & SP,	F	125°F (52°C)
20.1	FB., KF, KP, SD, SF, & SP	F	104°F (40°C)
16.1	None, KB, KH, SS, ST & SU	H	140°F (60°C) ———— 125°F (52°C) For Steam Service
20.1	HB, KH, SS, ST, SU & SV	H	140°F (60°C) ———— Not for Steam Service

† Minimum ambient temperature −40° F (−40° C).

Positioning

This solenoid is designed to perform properly when mounted in any position. However, for optimum life and performance, the solenoid should be mounted vertically and upright to reduce the possibility of foreign matter accumulating in the solenoid base sub−assembly area.

Wiring

Wiring must comply with local codes and the National Electrical Code. All solenoids supplied with lead wires are provided with a grounding wire which is green or green with yellow stripes and a 1/2″ conduit connection. To facilitate wiring, the solenoid may be rotated 360°. For the watertight and explosionproof solenoid, electrical fittings must be approved for use in the approved hazardous locations.

⚠ CAUTION: Cryogenic Applications − Solenoid lead wire insulation should not be subjected to cryogenic temperatures. Adequate lead wire protection and routing must be provided.

50 Hanover Road, Florham Park, New Jersey 07932 www.ascovalve.com

E179418

Additional Wiring Instructions For Optional Features:

- **Open−Frame solenoid with 1/4″ spade terminals.**

For solenoids supplied with screw terminal connections use #12−18 AWG stranded copper wire rated at 90°C or greater. Torque terminal block screws to 10 ± 2 in−lbs [1,0 ± 1,2 Nm]. A tapped hole is provided in the solenoid for grounding, use a #10−32 machine screw. Torque grounding screw to 15 − 20 in−lbs [1,7 − 2,3 Nm]. On solenoids with screw terminals, the socket head screw holding the terminal block to the solenoid is the grounding screw. Torque the screw to 15 − 20 in−lbs [1,7 − 2,3 Nm] with a 5/32″ hex key wrench.

- **Junction Box**

The junction box is used with spade or screw terminal solenoids only and is provided with a grounding screw and a 1/2″ conduit connection. Connect #12−18 AWG standard copper wire only to the screw terminals. Within the junction box use field wire that is rated 90°C or greater for connections. For steam service use 105°C rated wire up to 50 psi or use 125°C rated wire above 50 psi. After electrical hookup, replace cover gasket, cover, and screws. Tighten screws evenly in a crisscross manner.

- **DIN Plug Connector Kit No.K236034**

1. The open−frame solenoid is provided with DIN terminals to accommodate the plug connector kit.
2. Remove center screw from plug connector. Using a small screwdriver, pry terminal block from connector cover.
3. Use #12−18 AWG stranded copper wire rated at 90°C or greater for connections. Strip wire leads back approximately 1/4″ for installation in socket terminals. The use of wire−end sleeves is also recommended for these socket terminals. Maximum length of wire−end sleeves to be approximately 1/4″. Tinning of the ends of the lead wires is not recommended.
4. Thread wire through gland nut, gland gasket, washer and connector cover.

NOTE: Connector housing may be rotated in 90° increments from position shown for alternate positioning of cable entry.

5. Check DIN connector terminal block for electrical markings. Then make electrical hookup to terminal block according to markings on it. Snap terminal block into connector cover and install center screw.
6. Position connector gasket on solenoid and install plug connector. Torque center screw to 5 ± 1 in−lbs [0,6 ± 1,1 Nm].

Installation of Solenoid

Solenoids may be assembled as a complete unit. Tightening is accomplished by means of a hex flange at the base of the solenoid.

Solenoid Temperature

Standard solenoids are designed for continuous duty service. When the solenoid is energized for a long period, the solenoid becomes hot and can be touched by hand only for an instant. This is a safe operating temperature.

MAINTENANCE

⚠ WARNING: To prevent the possibility of death, serious injury or property damage, turn off electrical power, depressurize solenoid operator and/or valve, and vent fluid to a safe area before servicing.

Cleaning

All solenoid operators and valves should be cleaned periodically. The time between cleaning will vary depending on medium and service conditions. In general, if the voltage to the solenoid is correct, sluggish valve operation, excessive noise or leakage will indicate that cleaning is required. Clean strainer or filter when cleaning the valve.

Preventive Maintenance

- Keep the medium flowing through the solenoid operator or valve as free from dirt and foreign material as possible.
- While in service, the solenoid operator or valve should be operated at least once a month to insure proper opening and closing.
- Depending on the medium and service conditions, periodic inspection of internal valve parts for damage or excessive wear is recommended. Thoroughly clean all parts. Replace any worn or damaged parts.

Causes of Improper Operation

- **Faulty Control Circuit:** Check the electrical system by energizing the solenoid. A metallic *click* signifies that the solenoid is operating. Absence of the *click* indicates loss of power supply. Check for loose or blown fuses, open−circuited or grounded solenoid, broken lead wires or splice connections.
- **Burned−Out Solenoid:** Check for open−circuited solenoid. Replace if necessary. Check supply voltage; it must be the same as specified on nameplate/retainer and marked on the solenoid. Check ambient temperature and check that the core is not jammed.
- **Low Voltage:** Check voltage across the solenoid leads. Voltage must be at least 85% of rated voltage.

Solenoid Replacement (Refer to Figure 1)

1. Disconnect conduit, coil leads, and grounding wire.

NOTE: Any optional parts attached to the old solenoid must be reinstalled on the new solenoid. For removal or assembly of optional parts, see Figure 2, 3 or 4.

2. Snap off red cap from top of solenoid base sub−assembly.
3. Push down on solenoid. Then using a suitable screwdriver, insert blade between solenoid spacer and nameplate/retainer. Pry up slightly and push to remove.
4. Remove solenoid spacer and solenoid from solenoid base sub−assembly.
5. Reassemble in reverse order of disassembly. Use exploded views for identification and placement of parts.

Disassembly and Reassembly of Solenoids

1. Remove solenoid, see ***Solenoid Replacement***.
2. Remove spring washer from solenoid base sub−assembly.
3. Unscrew solenoid base sub−assembly from valve body. For Series 8014G solenoids a special wrench adapter for the solenoid base sub−assembly is supplied in the ASCO Rebuild Kit. For wrench adapter only, order Wrench Kit No. K218950.
4. Remove internal solenoid parts for cleaning or replacement. Use exploded views for identification and placement of parts.
5. If the solenoid is part of a valve, refer to basic valve installation and maintenance instructions for further disassembly.
6. Reassemble in reverse order of disassembly. Use exploded views for identification and placement of parts.
7. Torque solenoid base sub−assembly and adapter to 175±25 in−lbs [19,8±2,8 Nm].

ORDERING INFORMATION FOR ASCO SOLENOIDS

When Ordering Solenoids for ASCO Solenoid Operators or Valves, order the number stamped on the solenoid. Also specify voltage and frequency.

ASCO® 50 Hanover Road, Florham Park, New Jersey 07932 www.ascovalve.com

Torque Chart

Part Name	Torque Value In–lbs	Torque Value Nm
Solenoid base sub–assembly & adapter	175 ± 25	19,8 ± 2,8

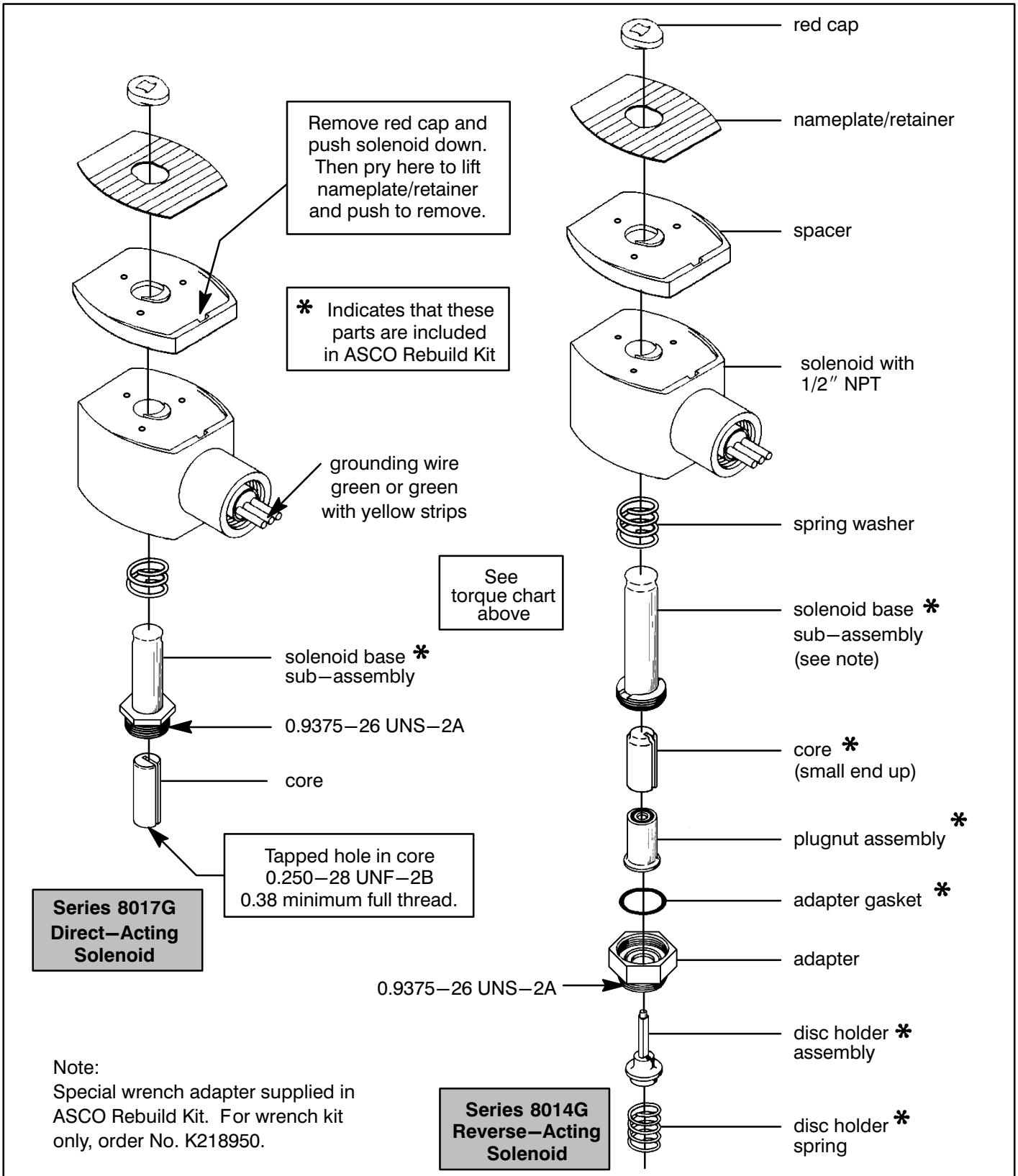

Figure 1. Series 8017G and 8014G solenoid assemblies.

ASCO® 50 Hanover Road, Florham Park, New Jersey 07932 www.ascovalve.com

Torque Chart

Part Name	Torque Value in Inch—Pounds	Torque Value in Newton—Meters
terminal block screws	10 ± 2	1,1 ± 0,2
socket head screw	15 – 20	1,7 – 2,3
center screw	5 ± 1	0,6 ± 0,1

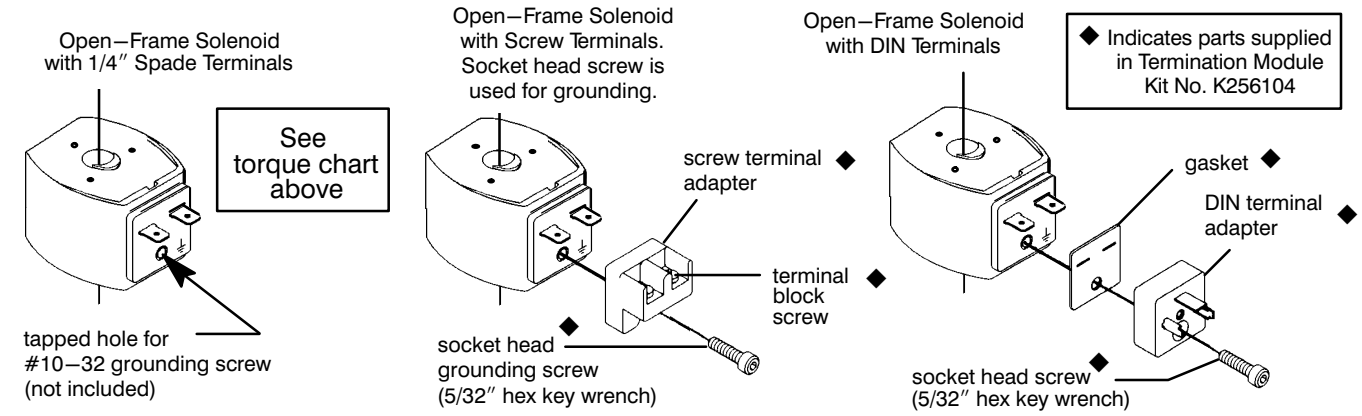

Figure 2. Open—frame solenoids

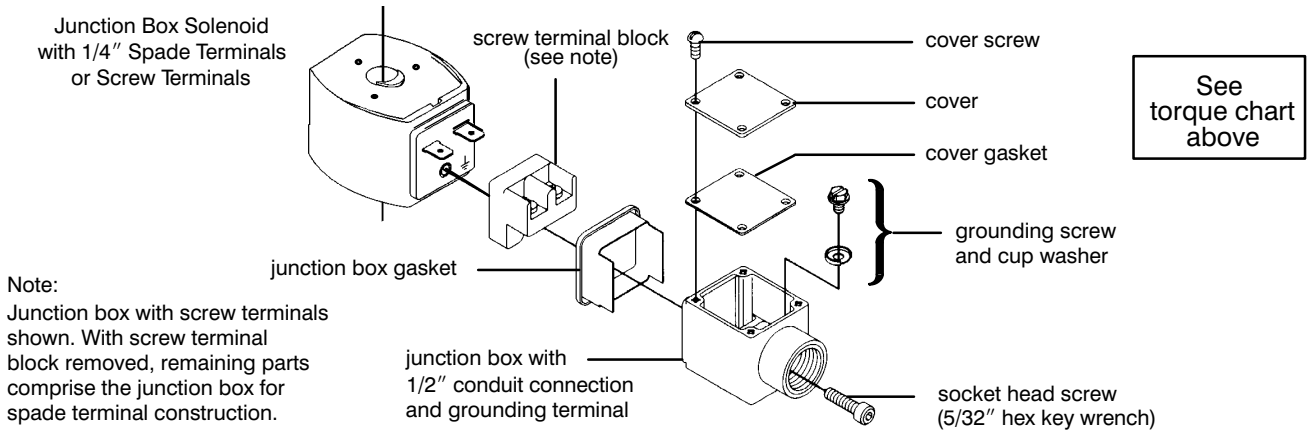

Figure 3. Junction box (optional feature)

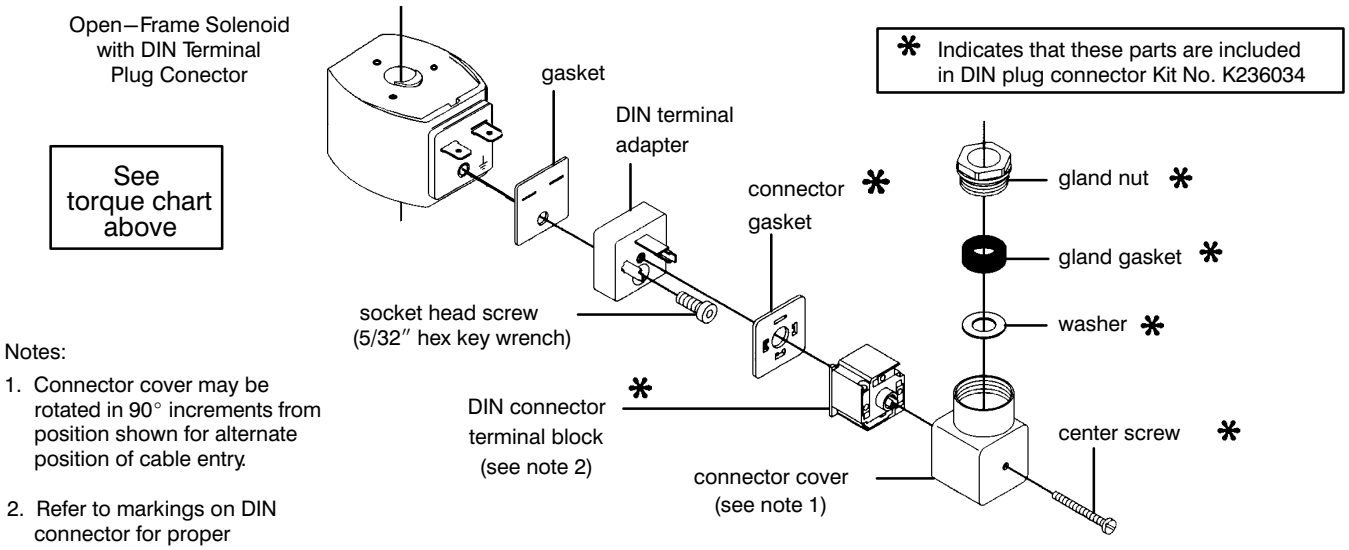

Figure 4. DIN plug connector kit No. K236034 (optional feature)

ASCO® 50 Hanover Road, Florham Park, New Jersey 07932 www.ascovalve.com